

# CORONA X 120

CORONA X 120
Cod. **02181308** EAN **8422248110556**

- **Electronic Control Panel** with digital display authomatic shut-down timer
- 4 extraction levels, 3 + **1 TURBO**
- Extraction power (according to UNE/EN 61591): **850m³/h** - 340m³/h
- **Sound power (Reg.(EU) nº65/2014): 50dB(A)**, maximum: 65dB(A)
- BT3 motor. Ultra silent. Maximum energy consumption **286W**
- **High efficiency strip led lighting**
- Easy-to-install system
- Fully stainless steel washable dishwasher filters
- **Glass Visor**
- Stainless steel finishing
- Max. Pressure: 470 Pa
- 150/125 mm outlet diameter
- **Energy Class: A**

► **Accessories (not included)**

Active charcoal filter ..... Cod. 02859398 / EAN 8422248075497
Check valve ..... Cod. 02832004 / EAN 8422248480499
Duct cover ..... Cod. 02861306 / EAN 8422248109949




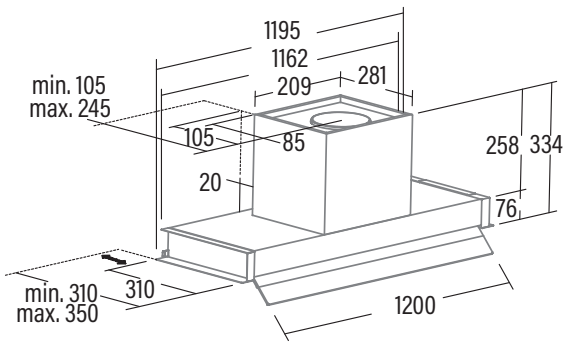


| | |
|---|---|
| **Code** | **02181308** |
| **EAN** | **8422248110556** |
| **Model** | **CORONA X 120 /B** |
| **Type** | Integrated |
| **Product fiche according to directives EU65/2014 - EN61591, EN60704-2-13, EN50564** | |
| AEC (Anual Energy consumption) (kWh/annum) | 53,3 |
| EEI class (Energy Efficiency Class) | A |
| FDE (Fluid Dynamic Efficiency) | 30,6 |
| FDE class (Fluid Dynamic Efficiency Class) | A |
| LE (Lighting Efficiency) (lux/W) | 16,1 |
| LE class (Lighting Efficiency Class) | B |
| GFE (Grease Filtering Efficiency) | 84,27 |
| GFE Class (Grease Filtering Efficiency class) | C |
| Air flow at minimum speed (m3/h) | 340 |
| Air flow at maximum speed (m3/h) | 600 |
| Air flow at intensive speed (TURBO) (m3/h) | 850 |
| Sound Power Level at minimum speed (dB) | 50 |
| Sound Power Level at maximum speed (dB) | 65 |
| Sound Power Level at intensive speed (TURBO) (dB) | 67 |
| Po (Power Consumption in off mode) (W) | 0,26 |
| Ps (Power Consumption in standby) (W) | 0 |
| **Integration directive EU 66/2014** | |
| *f* (Time Increase Factor) | 0,9 |
| EEI (Energy Efficiency Index) | 55,1 |
| QBEP (Flow Rate at Best Efficiency Point) (m3/h) | 416,9 |
| PBEP (Static Pressure Difference at Best Efficiency Point) (Pa) | 411 |
| WBEP (Electric Power Input at Best Efficiency Point) (W) | 155,7 |
| WL (Nominal Power Consumption of Lighting system) (W) | 6 |
| EMIDDLE (Average Illumination of Lighting system on Cooking surface) (lux) | 96,6 |
| **External Dimensions** | |
| Width (mm) | 1195 |
| Depth (mm) | 310-350 |
| Total max height(mm | 334 |
| Total min height(mm | 334 |
| Outlet Diameter (mm) | 150/125 |
| **Characteristics** | |
| Motor | BT3 |
| Extraction Levels | 3 + 1 |
| Motor Maximum Power Consumption | 280 |
| Maximum Pressure | 450 |
| Intensive Speed (TURBO) Pressure | 470 |
| Control Type | VL4i |
| Automatic shut-down timer | √ |
| Electronic Filter Saturation Indicator | - |
| Filter Type | Metallic |
| Anti-grease Filter Number | 2 |
| Inner Shield | - |
| **Lighting** | |
| Light Type | SS Led |
| Adjustable Intensity Lighting | - |
| Nº of Lamps | 2 |
| **Installation** | |
| Minimum height distance to a electric worktop hob (mm) | 550 |
| Minimum height distance to a gas worktop hob (mm) | 650 |
| Instalation with Outlet tube to the exterior / Recirculating | BOTH |
| Easy Instalation System | √ |
| **Electric Connection** | |
| Total Rush Power (W) | 286 |
| Rated Voltage (V) | 220-240 |
| Network Frequency (Hz) | 50 |
| Electrical Insulation Class | CLASE II |
| Plug | - |
| **Accessories** | |
| Upper Decorative tube Extension | 02861306 |
| White Decorative Tube | - |
| Black Decorative Tube | - |
| Island Tube Enhancer | - |
| Check Valve | 02832004 |
| MAX PRO Metal Filter | - |
| Metal Filter | 02800205 |
| DUAL Filter (metal + active charcoal) | - |
| Active Charcoal Filter | 02859398 |
| Noiseless Flexible Duct | 02893002 |