PSGBOV190DE00002

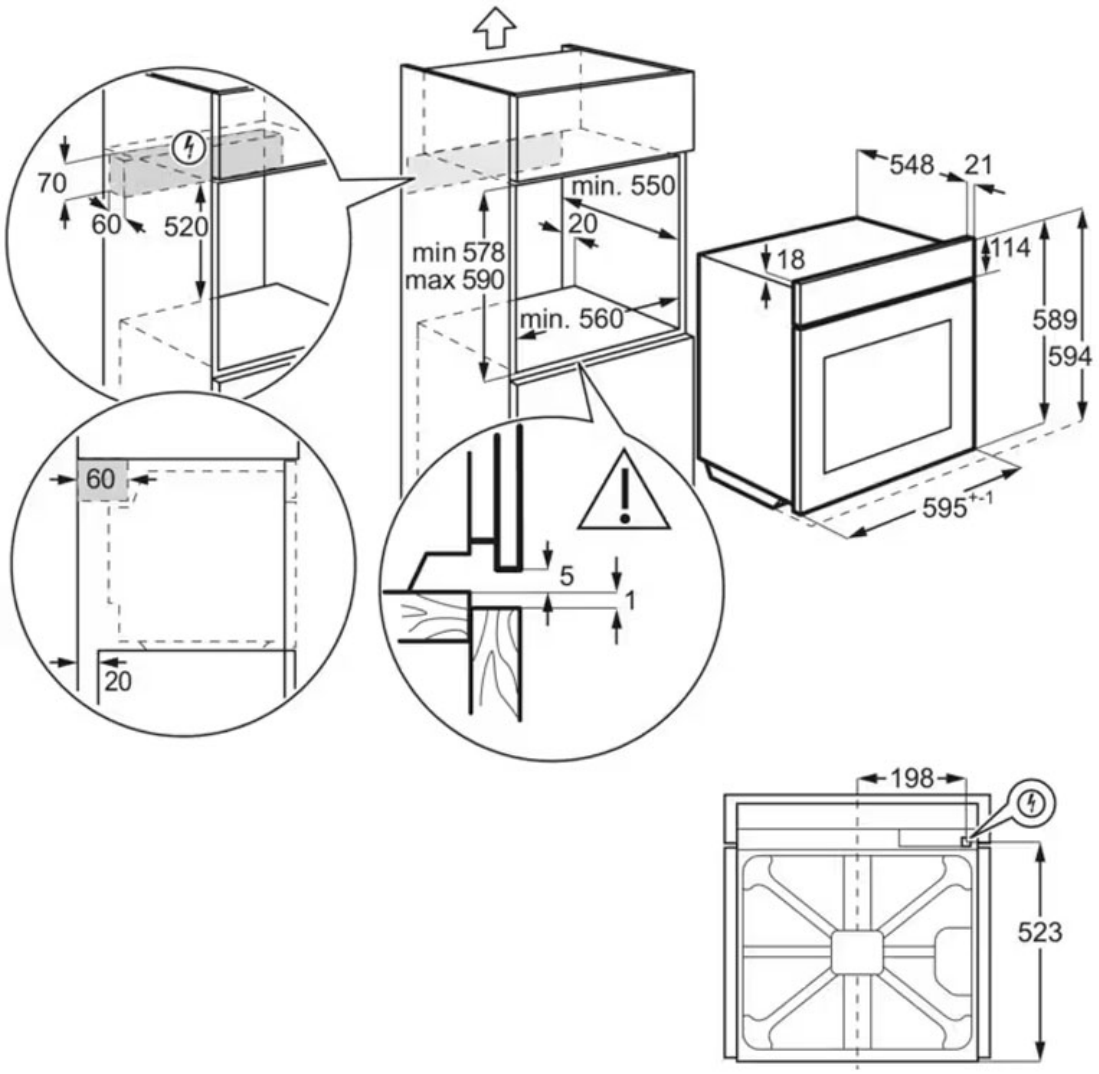

PSGBOV190DE00001

