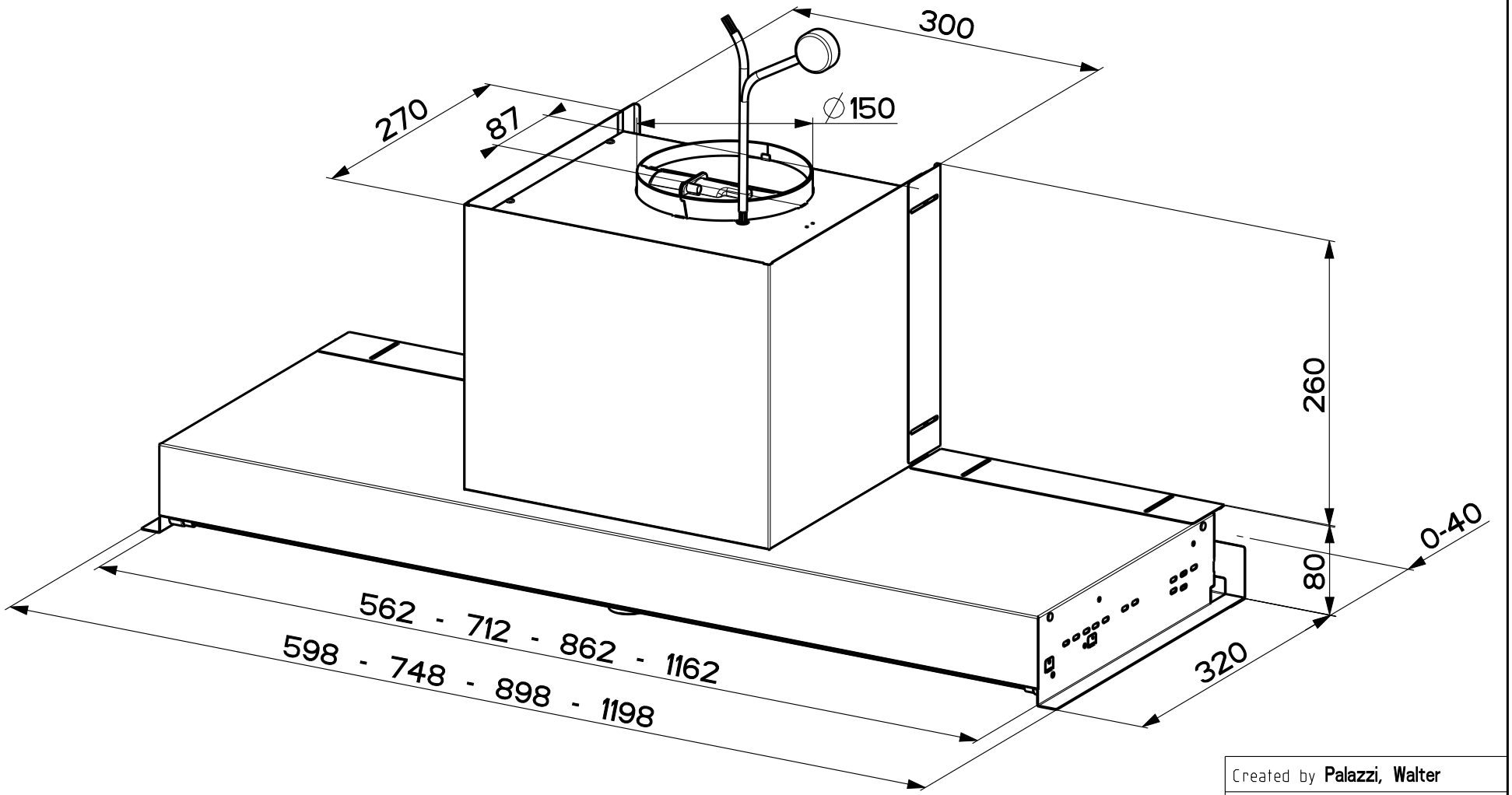

Created by **Palazzi, Walter**	
Denomination **DIMENSIONAL DRAWING ROT. D32 FB**	
Lang **EN**	Sheet **1/2**
Modif.by	
Approved by	
Approval date **21-Nov-2024**	
Doc. status **Released**	
Drawing N. **04B_804**	Rev **03**

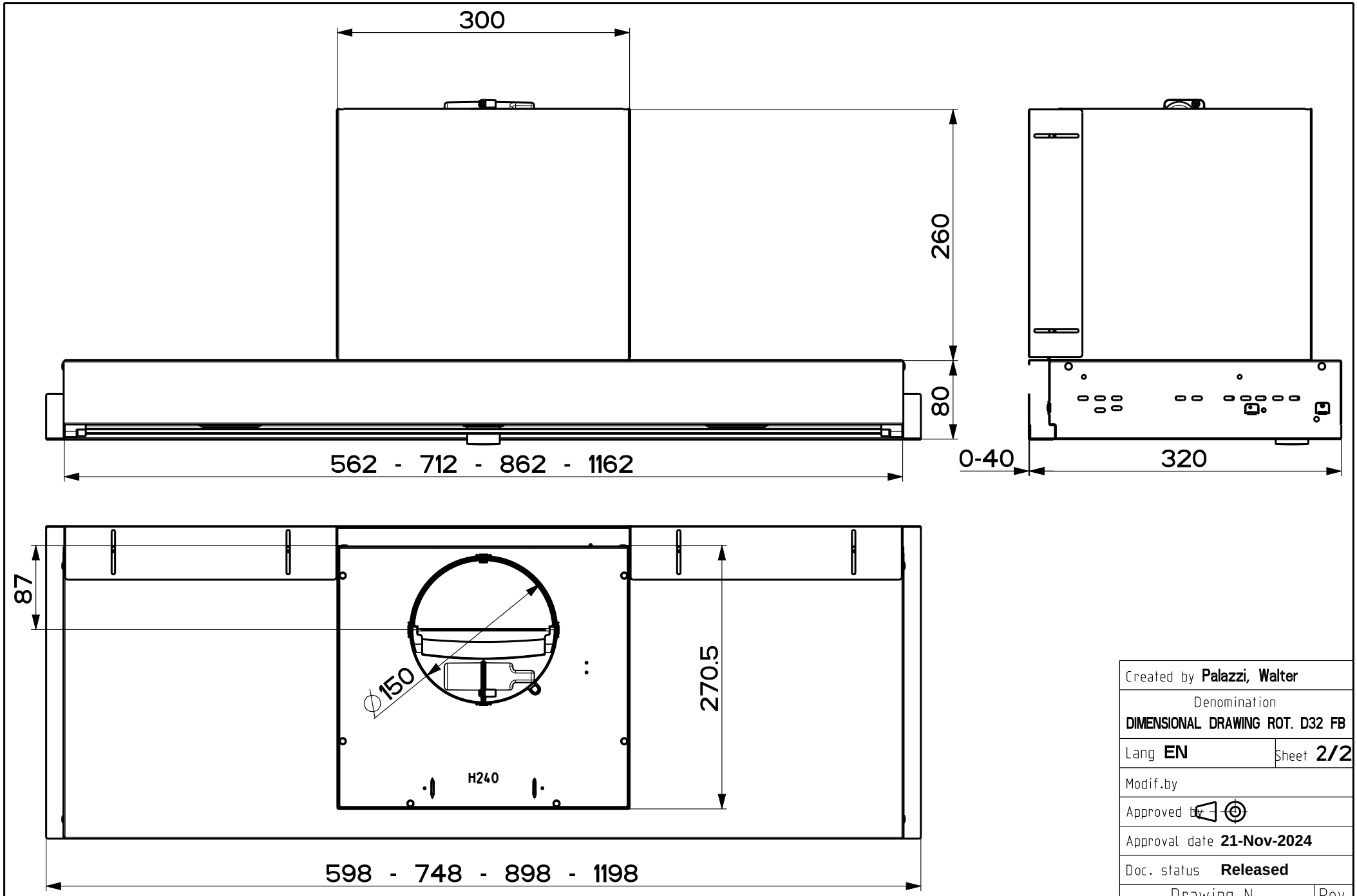

Created by **Palazzi, Walter**	
Denomination **DIMENSIONAL DRAWING ROT. D32 FB**	
Lang **EN**	Sheet **2/2**
Modif.by	
Approved by	
Approval date **21-Nov-2024**	
Doc. status **Released**	
Drawing N. **04B_804**	Rev **03**